BB 4000

4” BORING BAR SYSTEM

MACTECHONSITE.COM

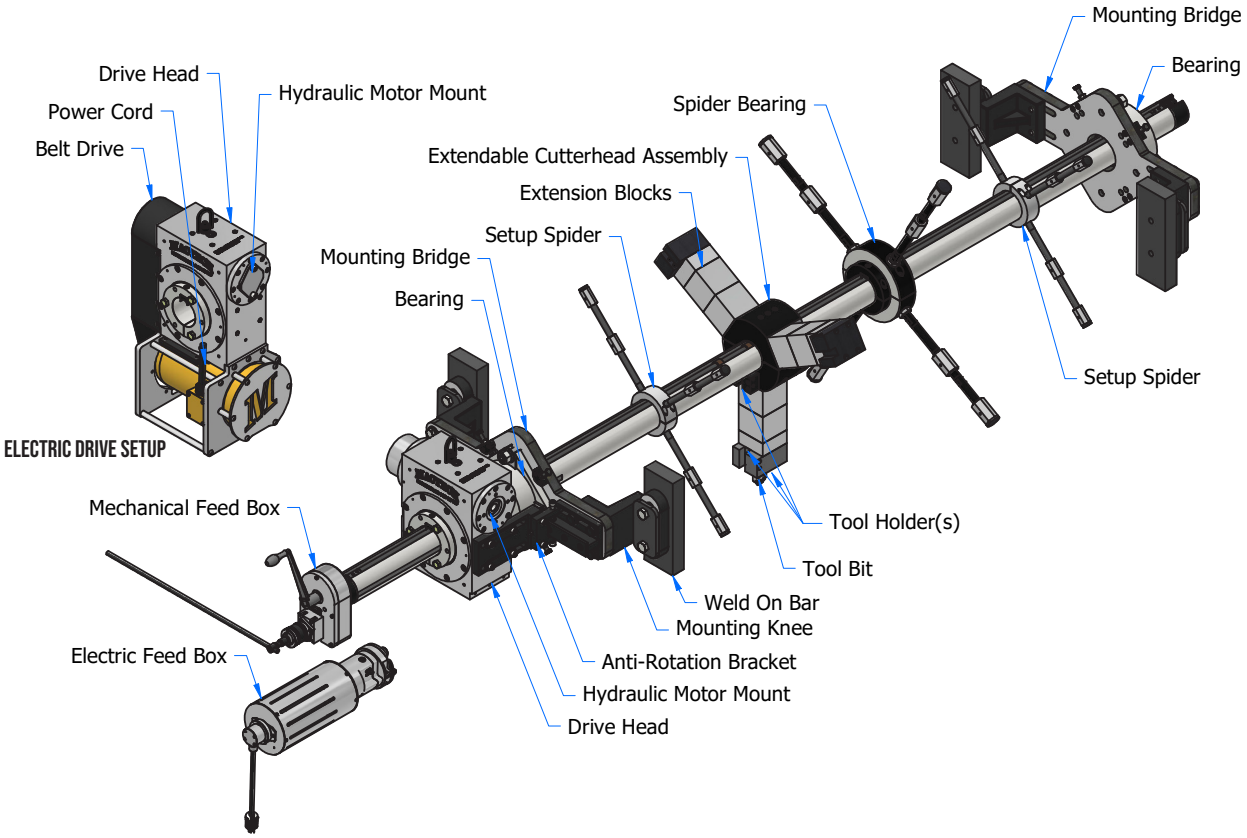

PRODUCT DESCRIPTION

Mactech’s simple to operate BB4000 Boring Bar is the solution for any bore repair that needs to be done right away. Powerful, accurate machining gets your equipment up and running fast, reducing your downtime and saving you money. The BB4000 system can utilize Hydraulic or Electric drive motors with Mechnical or Electric Feed boxes. Custom setups are our specialty, give us a call and we will make a system suited just for your application.

Contact Mactech about our Facing Arm options!

All dimensions and hydraulic requirements are for reference and may be subject to change without notice. Machine performance is subject to application and operator capability; please discuss your requirements directly with a Mactech sales representative. All information given and all sales made by Mactech Inc. are subject to their terms and conditions.

SPECIFICATIONS

Cutting Capacity	10” - 40.9” Inches
	254mm - 901mm
Cutting Capacity (with Large Bore Kit)	24” - 48.9” Inches
	609mm - 1242mm
Tooling	1” Sq. Shank
Mechinical Feed Rate	.003” / .004” / .006” Rev.
	0.08 / 0.11 / 0.16mm Rev.
Electrical Feed Rates (inch per minute)	Low: 0.52” inches / 13mm MAX
	Hi: 11.86” inches / 301mm MAX
Hydraulic Motor Max RPM	35 bar RPM at 14 GPM
7.5 HP Electric Drive Max RPM	72 bar RPM
Bar Length	*Variable: Contact Mactech with desired length*

MACTECH INC.
4079 PEPIN AVE UNIT 4
RED WING MN 55066
800-328-1488
INFO@MACTECHONSITE.COM

MACTECH OFFSHORE
302 IDA ROAD
BROUSSARD LA 70518
337-839-2793
INFO@MACTECHOFFSHORE.COM

MACTECH KENTUCKY
3880 INDUSTRIAL DRIVE
PADUCAH KY 42001
270-442-1559
INFO@MACTECHONSITE.COM

MACTECH WISCONSIN
2515 CLEVELAND AVE
MARINETTE WI 54143
800-328-1488
INFO@MACTECHONSITE.COM

MACTECH INTERNATIONAL
CONTACT US FROM ANYWHERE
AROUND THE WORLD
337-839-2793
INFO@MACTECHOFFSHORE.COM

WORK HARD | WORK SAFE | WE BEFORE ME | WELCOME CHALLENGES | WOW THEM

BB 4000

4" BORING BAR SYSTEM

MACTECHONSITE.COM

MOUNTING BRIDGE DIMENSIONS

Note: This shows the mounting limits for both the Standard Kit and the Big Bore Kit. The two sets of Mounting Knees can not be used in tandem.

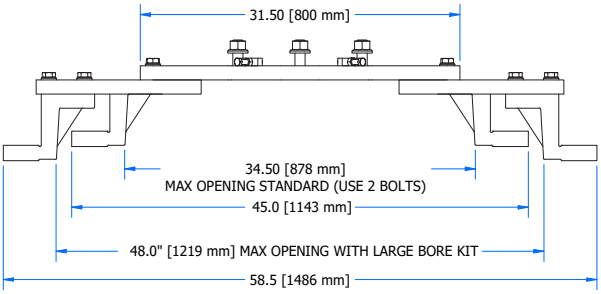

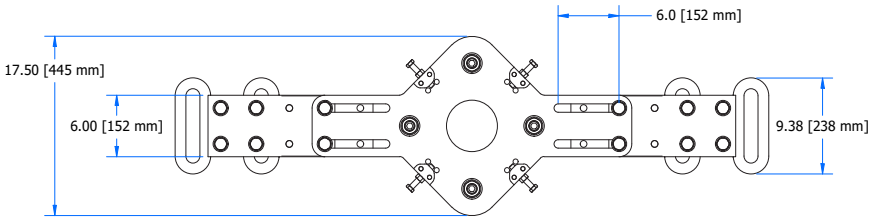

DRIVE DIMENSIONS

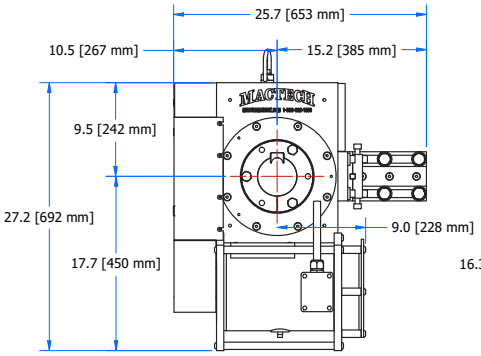

ELECTRIC DRIVE OPTION

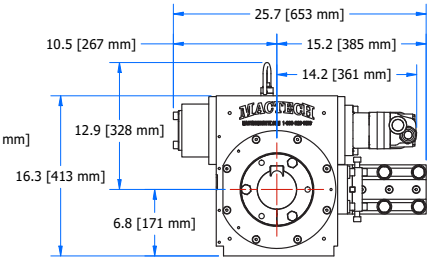

HYDRAULIC DRIVE OPTION

CUTTING RANGE	
MIN. W/ Special Tooling	Ø 10.00 [254 mm]
Minimum Standard / Large	Ø 11.40 [289 mm]
MAX Standard Cut	Ø 40.9 [901 mm]
Standard Opening Dim.	Ø 34.5 {878 mm]
Max Large Cut	Ø 48.9 [1219 mm]
Max Large Opening Dim.	Ø 48.0 [1242 mm]

COMPONENT SETUP DIMENSIONS

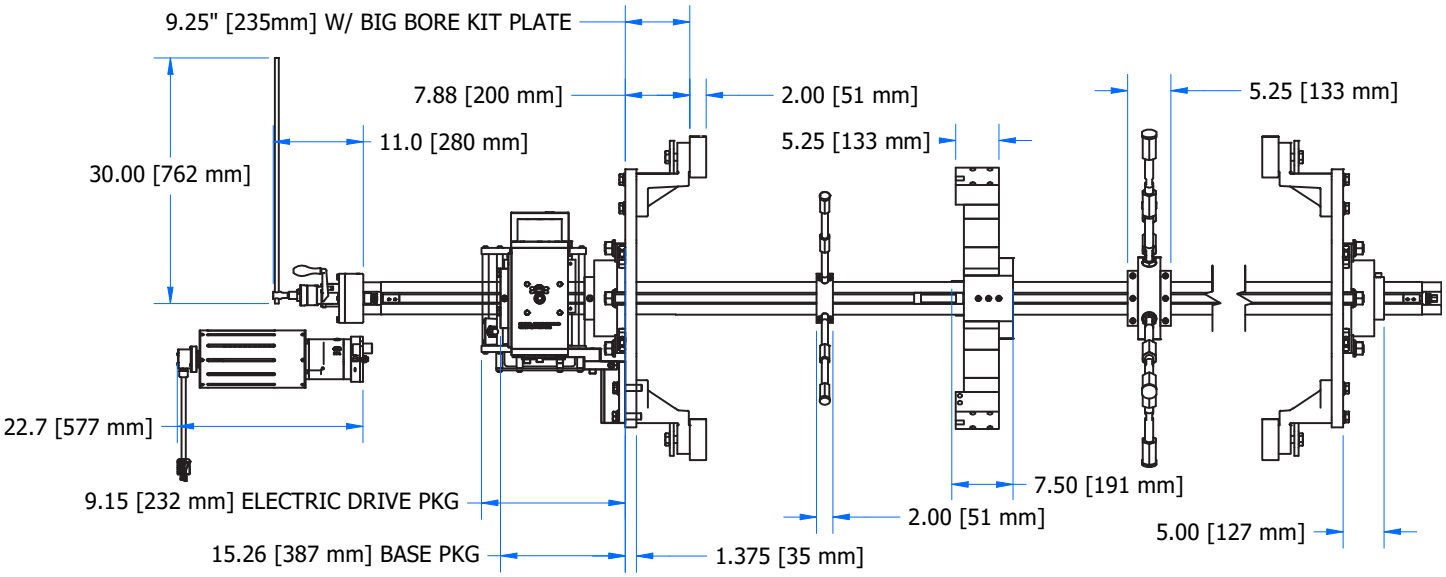

All dimensions and hydraulic requirements are for reference and may be subject to change without notice. Machine performance is subject to application and operator capability; please discuss your requirements directly with a Mactech sales representative. All information given and all sales made by Mactech Inc. are subject to their terms and conditions.